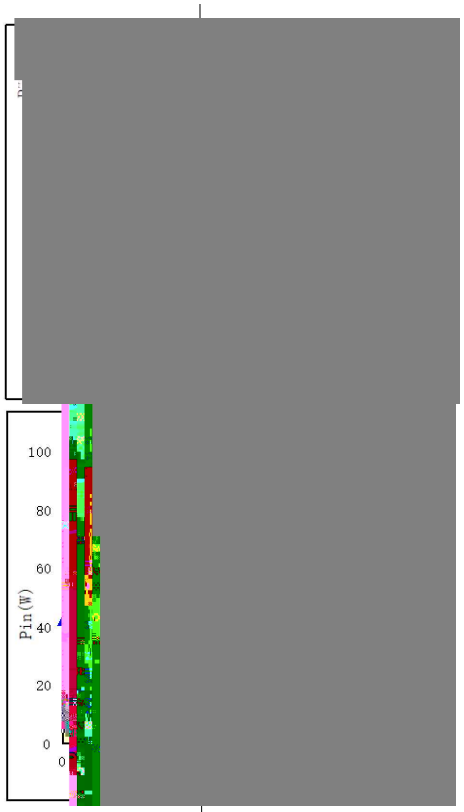

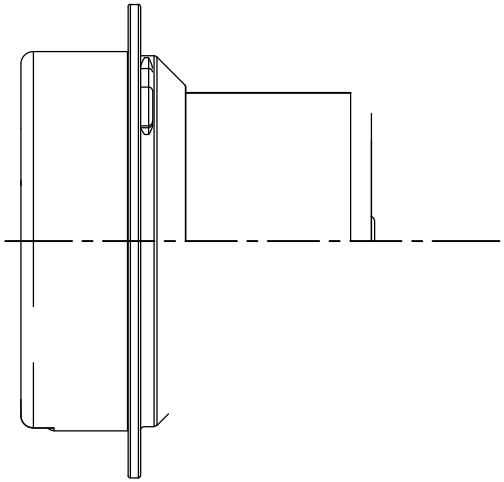

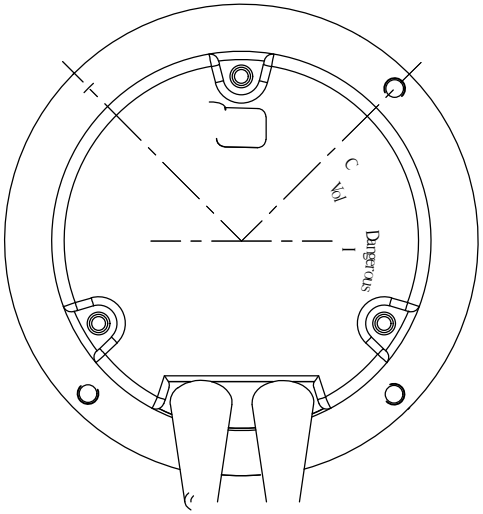

~+60

12. Storage temperature(储存温度): -25 ~+80

13. Type of protection(防护等级)